The value of randomized strategies in distributionally robust risk averse network interdiction problems

Utsav Sadana
Department of Decision Sciences

HEC MONTRÉAL

(joint work with Erick Delage)

INFORMS Annual Meeting
Nov 11, 2020

GERAD

Canada Research Chairs / Chaires de recherche du Canada

Canada

Deterministic Network interdiction

- Interdictor removes arcs to minimize the flow subject to a budget, and then the adversary routes flow in the network.

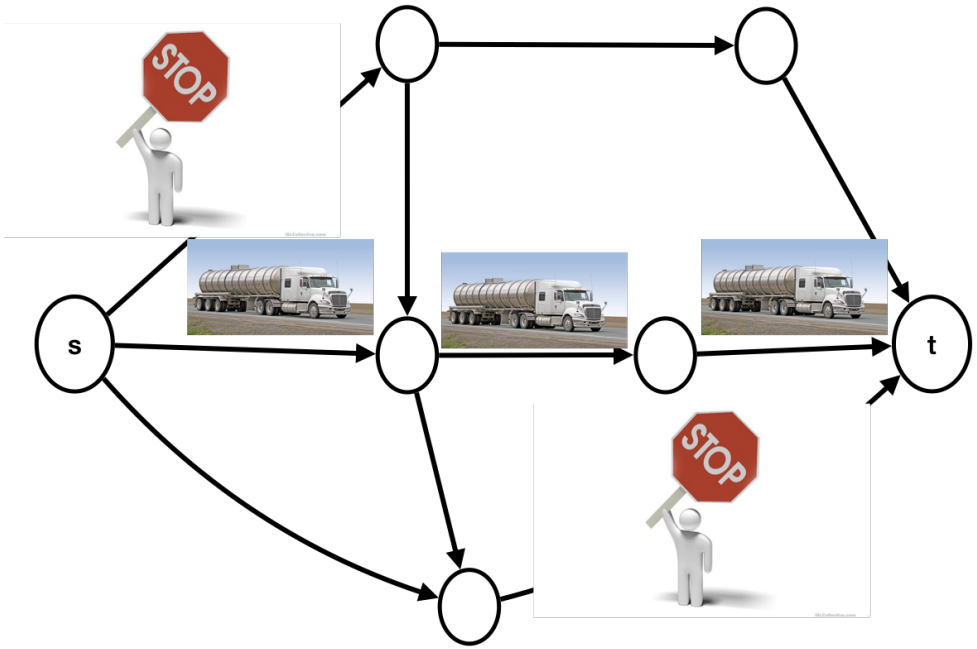

- Even when cost of interdicting each arc is equal to 1, network interdiction problem is NP-hard (Wood, 1993).

Distributionally Robust Optimization (DRO)

- In many real-world applications, the parameters of an agent's decision model, e.g., the capacity of the arcs in a network interdiction problem, can be undetermined.
- Stochastic Programming can lead to post-decision disappointment referred to as the *optimizer's curse* (Smith and Winkler, 2006).
- DRO seeks a solution that performs best according to the worst-case distribution among the probability distributions that lie in a distributional ambiguity set $\mathcal{Q}$.
- Delage et al. (2019) showed that it can be beneficial to employ randomization in non-convex DRO problems.

NETWORK

- Directed Network $G(V, E)$, $V \rightarrow$ nodes, $E \rightarrow$ arcs
- $\delta^-(i) = \{(i, j) | j \in V\}$ arcs leaving node $i \in V$
- $\delta^+(i) = \{(j, i) | j \in V\}$ arcs entering node $i \in V$
- A flow in the graph G is denoted by $\boldsymbol{x} \in \mathbb{R}_+^{|E|}$
- $\forall e \in E, x_e \leq c_e$; capacity of all arcs is denoted by $\boldsymbol{c} \in \mathbb{R}_+^{|E|}$.
- The conservation of flow at each node is ensured by

$$\sum_{e \in \delta^-(i)} x_e - \sum_{e \in \delta^+(i)} x_e = 0, \forall i \notin \{s, t\}$$

s : source node; t : sink node

Model

- $\mathcal{L}$: finite set of feasible plans for the interdictor

$$\mathcal{L} = \{\boldsymbol{\ell} \in \{0,1\}^{|E|} | \sum_{e} \ell_e \leq B\}$$

- **Randomized strategy of interdictor** is a probability distribution $\boldsymbol{u}$ over the set $\mathcal{L}$ where $\boldsymbol{u} \in \Delta\mathcal{L}$
- $\ell_e = 1$ if the interdictor removes arc e and $\ell_e = 0$ if arc e is not interdicted
- The distribution of the capacities of all the arcs is only known to lie in set $\mathcal{Q}$.
- We assume that the distribution is discrete with a set of scenarios $\mathcal{K}$ supported on $\{\boldsymbol{c}^k\}_{k\in\mathcal{K}}$.

DRNI

- Given an interdiction plan $\boldsymbol{\ell}$ and arc capacities $\boldsymbol{c}^k$, the flow player solves

$$\begin{aligned} f_{\boldsymbol{\ell},k} := \max_{\boldsymbol{x}} \quad & \boldsymbol{d}^T\boldsymbol{x} \\ \text{s. t.} \quad & N\boldsymbol{x} = 0 && \text{(flow conservation)} \\ & 0 \le \boldsymbol{x} \le C^k(\mathbf{1} - \boldsymbol{\ell}) \end{aligned}$$

  where $\boldsymbol{d}^T\boldsymbol{x} = \sum_{e\in\delta^+(t)} x_e$, $C^k = \operatorname{diag}(\boldsymbol{c}^k)$.

- The interdictor solves the distributionally robust network interdiction (DRNI) problem:

$$\underset{\boldsymbol{u}\in\Delta\mathcal{L}}{\text{minimize}} \max_{\boldsymbol{q}\in\mathcal{Q}} \text{CVaR}^{\alpha}_{\boldsymbol{\ell}\sim\boldsymbol{u},k\sim\boldsymbol{q}}[f_{\boldsymbol{\ell},k}]$$

$$\text{CVaR}^{\alpha}_{\boldsymbol{\ell}\sim\boldsymbol{u},k\sim\boldsymbol{q}}[f_{\boldsymbol{\ell},k}] := \inf_{\zeta} \ \zeta + \frac{1}{1-\alpha}\sum_{\boldsymbol{\ell}}\sum_{k} q_k u_{\boldsymbol{\ell}}[f_{\boldsymbol{\ell},k} - \zeta]^+,$$

  where $[f_{\boldsymbol{\ell},k} - \zeta]^+ := \max(f_{\boldsymbol{\ell},k} - \zeta, 0)$.

DRNI

Theorem 1

When $\mathcal{Q}$ is a convex set, the interdictor's DRNI problem is equivalent to the following bilinear DRO problem

$$\underset{\boldsymbol{u},\zeta,\boldsymbol{\Delta},t,\boldsymbol{\eta}}{\text{minimize}} \quad t \tag{1a}$$

$$\text{subject to} \quad \zeta + \frac{1}{1-\alpha}\sum_{\boldsymbol{\ell}}\sum_{k} q_k \Delta_{\boldsymbol{\ell},k} \leq t \qquad \forall \boldsymbol{q} \in \mathcal{Q} \tag{1b}$$

$$\Delta_{\boldsymbol{\ell},k} \geq u_{\boldsymbol{\ell}} f_{\boldsymbol{\ell},k} - \eta_{\boldsymbol{\ell}} \qquad \forall \boldsymbol{\ell} \in \mathcal{L},\ k \in \mathcal{K} \tag{1c}$$

$$\eta_{\boldsymbol{\ell}} = u_{\boldsymbol{\ell}} \zeta \qquad \forall \boldsymbol{\ell} \in \mathcal{L} \tag{1d}$$

$$\Delta_{\boldsymbol{\ell},k} \geq 0 \qquad \forall \boldsymbol{\ell} \in \mathcal{L},\ k \in \mathcal{K} \tag{1e}$$

$$\boldsymbol{u} \geq 0 \tag{1f}$$

$$\mathbf{1}^T \boldsymbol{u} = 1 \tag{1g}$$

$$0 \leq \zeta \leq \bar{\zeta} \tag{1h}$$

where $\bar{\zeta} := \max_{k \in \mathcal{K}} f_{\mathbf{0},k}$.

DRNI

- Non convex due to bilinear terms $u_\ell \zeta$
- Bilinear problems are NP hard in general
- Compute $f_{\ell,k}$ for each $k \in \mathcal{K}$ and $\ell \in \mathcal{L}$

Theorem 1

When $\mathcal{Q}$ is a convex set, th
DRO problem

$$\underset{u,\zeta,\Delta,t,\eta}{\text{minimize}} \quad t \tag{1a}$$

$$\text{subject to} \quad \zeta + \frac{1}{1-\alpha} \sum_{\ell} \sum_{k} q_k \Delta_{\ell,k} \leq t \qquad \forall q \in \mathcal{Q} \tag{1b}$$

$$\Delta_{\ell,k} \geq u_\ell f_{\ell,k} - \eta_\ell \qquad \forall \ell \in \mathcal{L},\ k \in \mathcal{K} \tag{1c}$$

$$\eta_\ell = u_\ell \zeta \qquad \forall \ell \in \mathcal{L} \tag{1d}$$

$$\Delta_{\ell,k} \geq 0 \qquad \forall \ell \in \mathcal{L},\ k \in \mathcal{K} \tag{1e}$$

$$u \geq 0 \tag{1f}$$

$$\mathbf{1}^T u = 1 \tag{1g}$$

$$0 \leq \zeta \leq \bar{\zeta} \tag{1h}$$

where $\bar{\zeta} := \max_{k \in \mathcal{K}} f_{\mathbf{0},k}$.

ASSUMPTION

- Distributional ambiguity set $\mathcal{Q}$ is given by

$$\mathcal{Q} := \left\{ \boldsymbol{q} \in \mathbb{R}^{|\mathcal{K}|} \,|\exists \boldsymbol{z} \in \mathcal{Z}(\Gamma),\ \ \boldsymbol{q} \geq 0, \sum_{k=1}^{|\mathcal{K}|} q_k = 1, \boldsymbol{q} = \hat{\boldsymbol{q}} + \mathrm{diag}(\bar{\boldsymbol{q}})\boldsymbol{z} \right\}$$

- $\hat{\boldsymbol{q}} \in \Delta\mathcal{K}$: **reference distribution**, e.g., $\hat{\boldsymbol{q}} = \frac{1}{|\mathcal{K}|}\mathbf{1}$
- $\bar{\boldsymbol{q}}$: **magnitude of potential perturbations**.
- $\mathcal{Z}$: "budgeted uncertainty set":

$$\mathcal{Z}(\Gamma) = \left\{ \boldsymbol{z} \in \mathbb{R}^{|\mathcal{K}|} | -1 \leq \boldsymbol{z} \leq 1, \sum_{k=1}^{|\mathcal{K}|} |z_k| \leq \Gamma \right\}$$

Proposition 2 (Robust Counterpart of DRNI problem)

$$\underset{\boldsymbol{u},\zeta,\boldsymbol{\Delta},t,\boldsymbol{\eta}}{\text{minimize}} \quad t \tag{2a}$$

$$\text{subject to} \quad \zeta + \sum_{k' \in \mathcal{K}} w_{k'} + \sum_{k' \in \mathcal{K}} w^-_{k'} + \Gamma\chi$$

$$+ \sum_{k' \in \mathcal{K}} \hat{q}_{k'}\beta_{k'} + \frac{1}{1-\alpha}\sum_{\boldsymbol{\ell} \in \mathcal{L}} \Delta_{\boldsymbol{\ell},k} - \beta_k \leq t \qquad \forall k \in \mathcal{K} \tag{2b}$$

$$\chi \geq \bar{q}_k\beta_k - w_k \qquad \forall k \in \mathcal{K} \tag{2c}$$

$$\chi \geq -\bar{q}_k\beta_k - w^-_k \qquad \forall k \in \mathcal{K} \tag{2d}$$

$$\boldsymbol{w} \geq 0, \boldsymbol{w}^- \geq 0, \chi \geq 0 \tag{2e}$$

$$\Delta_{\boldsymbol{\ell},k} \geq u_{\boldsymbol{\ell}} f_{\boldsymbol{\ell},k} - \eta_{\boldsymbol{\ell}} \qquad \forall \boldsymbol{\ell} \in \mathcal{L},\ k \in \mathcal{K} \tag{2f}$$

$$\eta_{\boldsymbol{\ell}} = u_{\boldsymbol{\ell}}\zeta \qquad \forall \boldsymbol{\ell} \in \mathcal{L} \tag{2g}$$

$$\Delta_{\boldsymbol{\ell},k} \geq 0 \qquad \forall \boldsymbol{\ell} \in \mathcal{L},\ k \in \mathcal{K} \tag{2h}$$

$$\boldsymbol{u} \geq 0 \tag{2i}$$

$$\mathbf{1}^T\boldsymbol{u} = 1 \tag{2j}$$

$$0 \leq \zeta \leq \bar{\zeta} \tag{2k}$$

Proposition 2 (R

- When either $\boldsymbol{u}$ or ζ is fixed, the problem reduces to a linear program
- When ζ is constrained to lie in a bounded interval $\bar{\mathcal{I}}$, a spatial branch and bound scheme on ζ seems appropriate (Chandraker and Kriegman (2008))

$$
\begin{aligned}
\underset{\boldsymbol{u},\zeta,\boldsymbol{\Delta},t,\boldsymbol{\eta}}{\text{minimize}} \quad & t \\
\textit{subject to} \quad & \zeta + \sum_{k' \in \mathcal{K}} w_{k'} + \sum_{k' \in \mathcal{K}} w_{k'}^{-} + \Gamma\chi \\
& + \sum_{k' \in \mathcal{K}} \hat{q}_{k'} \beta_{k'} + \frac{1}{1-\alpha} \sum_{\boldsymbol{\ell} \in \mathcal{L}} \Delta_{\boldsymbol{\ell},k} - \beta_k \leq t && \forall k \in \mathcal{K} && \text{(2b)} \\
& \chi \geq \bar{q}_k \beta_k - w_k && \forall k \in \mathcal{K} && \text{(2c)} \\
& \chi \geq -\bar{q}_k \beta_k - w_k^{-} && \forall k \in \mathcal{K} && \text{(2d)} \\
& \boldsymbol{w} \geq 0, \boldsymbol{w}^{-} \geq 0, \chi \geq 0 && && \text{(2e)} \\
& \Delta_{\boldsymbol{\ell},k} \geq u_{\boldsymbol{\ell}} f_{\boldsymbol{\ell},k} - \eta_{\boldsymbol{\ell}} && \forall \boldsymbol{\ell} \in \mathcal{L},\ k \in \mathcal{K} && \text{(2f)} \\
& \eta_{\boldsymbol{\ell}} = u_{\boldsymbol{\ell}} \zeta && \forall \boldsymbol{\ell} \in \mathcal{L} && \text{(2g)} \\
& \Delta_{\boldsymbol{\ell},k} \geq 0 && \forall \boldsymbol{\ell} \in \mathcal{L},\ k \in \mathcal{K} && \text{(2h)} \\
& \boldsymbol{u} \geq 0 && && \text{(2i)} \\
& \mathbf{1}^T \boldsymbol{u} = 1 && && \text{(2j)} \\
& 0 \leq \zeta \leq \bar{\zeta} && && \text{(2k)}
\end{aligned}
$$

Proposition 2 (Robust Counterpart of DRNI problem)

$$\underset{\boldsymbol{u},\zeta,\boldsymbol{\Delta},t,\boldsymbol{\eta}}{\text{minimize}} \quad t \tag{2a}$$

$$\text{subject to} \quad \zeta + \sum_{k' \in \mathcal{K}} w_{k'} + \sum_{k' \in \mathcal{K}} w^-_{k'} + \Gamma\chi$$

$$+ \sum_{k' \in \mathcal{K}} \hat{q}_{k'}\beta_{k'} + \frac{1}{1-\alpha}\sum_{\boldsymbol{\ell} \in \mathcal{L}} \Delta_{\boldsymbol{\ell},k} - \beta_k \leq t \qquad \forall k \in \mathcal{K} \tag{2b}$$

$$\chi \geq \bar{q}_k\beta_k - w_k \tag{2c}$$

$$\chi \geq -\bar{q}_k\beta_k - w^-_k \tag{2d}$$

$$\boldsymbol{w} \geq 0, \boldsymbol{w}^- \geq 0, \chi \geq 0 \tag{2e}$$

$$\Delta_{\boldsymbol{\ell},k} \geq u_{\boldsymbol{\ell}} f_{\boldsymbol{\ell},k} - \eta_{\boldsymbol{\ell}} \tag{2f}$$

$$\eta_{\boldsymbol{\ell}} = u_{\boldsymbol{\ell}}\zeta \tag{2g}$$

$$\Delta_{\boldsymbol{\ell},k} \geq 0 \tag{2h}$$

$$\boldsymbol{u} \geq 0 \tag{2i}$$

$$\mathbf{1}^T\boldsymbol{u} = 1 \tag{2j}$$

$$0 \leq \zeta \leq \bar{\zeta} \tag{2k}$$

Define the problem:

$$g(\bar{\mathcal{I}}) := \min_{\substack{\boldsymbol{u}, t, \boldsymbol{w}, \boldsymbol{w}^-, \\ \boldsymbol{\eta}, \chi, \boldsymbol{\beta}, \Delta, \zeta}} \quad t$$

$$\text{s. t.} \quad (2b) - (2j)$$

$$\zeta \in \bar{\mathcal{I}}$$

Spatial Branch and Bound

- The algorithm assumes the existence of the following two bounding operators $g_{\text{lb}}(\mathcal{I})$ and $g_{\text{ub}}(\mathcal{I})$ which satisfy:

$$g_{\text{lb}}(\mathcal{I}) \leq g(\mathcal{I}) \leq g_{\text{ub}}(\mathcal{I}) \,, \; \forall \mathcal{I} \subseteq \bar{\mathcal{I}} \,,$$

- The operators are such that for all sequence of intervals $\mathcal{I}_1, \mathcal{I}_2, \ldots$ converging to some ζ, the associated sequence of bounds $(g_{\text{lb}}(\mathcal{I}_j), g_{\text{ub}}(\mathcal{I}_j))$ converge to $g(\zeta)$.
- The operator $g_{\text{ub}}(\mathcal{I})$ is such that one can always efficiently produce a $\zeta^*_{\text{ub}}(\mathcal{I}) \in \mathcal{I}$ such that $g(\{\zeta^*_{\text{ub}}\}) = g_{\text{ub}}(\mathcal{I})$

RRLT WITH CG TO OBTAIN $g_{\text{LB}}(\mathcal{I})$

- Efficient procedure to establish a **lower bound** for the optimal value of interdictor's problem.
- Overcome the two difficulties:
  - bilinear in $\boldsymbol{u}$ and ζ: Employ a popular **reduced reformulation linearization technique** (see Liberti and Pantelides (2006)) that will relax the problem to a linear program.
  - size of the problem is exponential with respect to $|\mathcal{K}|$ due to the set $\mathcal{L}$: **Column generation** scheme that only considers a subset $\hat{\mathcal{L}} \subset \mathcal{L}$ and progressively adds relevant support points to it until optimality conditions are satisfied.

RRLT

Interdictor's bilinear optimization problem is given by

$$
\begin{aligned}
\underset{\boldsymbol{u},\zeta,\boldsymbol{\Delta},t,\boldsymbol{\eta}}{\text{minimize}} \quad & t \\
\text{subject to} \quad & \zeta + \sum_{k' \in \mathcal{K}} w_{k'} + \sum_{k' \in \mathcal{K}} w^-_{k'} + \Gamma\chi \\
& + \sum_{k' \in \mathcal{K}} \hat{q}_{k'}\beta_{k'} + \frac{1}{1-\alpha} \sum_{\boldsymbol{\ell} \in \mathcal{L}} \Delta_{\boldsymbol{\ell},k} - \beta_k \leq t && \forall k \in \mathcal{K} \\
& \chi \geq \bar{q}_k\beta_k - w_k && \forall k \in \mathcal{K} \\
& \chi \geq -\bar{q}_k\beta_k - w^-_k && \forall k \in \mathcal{K} \\
& \boldsymbol{w} \geq 0, \boldsymbol{w}^- \geq 0, \chi \geq 0 \\
& \Delta_{\boldsymbol{\ell},k} \geq u_{\boldsymbol{\ell}} f_{\boldsymbol{\ell},k} - \eta_{\boldsymbol{\ell}} && \forall \boldsymbol{\ell} \in \mathcal{L},\ k \in \mathcal{K} \\
& \eta_{\boldsymbol{\ell}} = u_{\boldsymbol{\ell}}\zeta && \forall \boldsymbol{\ell} \in \mathcal{L} \\
& \Delta_{\boldsymbol{\ell},k} \geq 0 && \forall \boldsymbol{\ell} \in \mathcal{L},\ k \in \mathcal{K} \\
& \boldsymbol{u} \geq 0 \\
& \mathbf{1}^T\boldsymbol{u} = 1 \\
& 0 \leq \zeta \leq \bar{\zeta}
\end{aligned}
$$

RRLT

Interdictor's bilinear optimization problem is given by

$$\begin{aligned}
\underset{\boldsymbol{u},\zeta,\boldsymbol{\Delta},t,\boldsymbol{\eta}}{\text{minimize}} \quad & t \\
\text{subject to} \quad & \zeta + \sum_{k' \in \mathcal{K}} w_{k'} + \sum_{k' \in \mathcal{K}} w^-_{k'} + \Gamma\chi \\
& + \sum_{k' \in \mathcal{K}} \hat{q}_{k'}\beta_{k'} + \frac{1}{1-\alpha}\sum_{\boldsymbol{\ell} \in \mathcal{L}} \Delta_{\boldsymbol{\ell},k} - \beta_k \le t \qquad \forall k \in \mathcal{K} \\
& \chi \ge \bar{q}_k\beta_k - w_k \\
& \chi \ge -\bar{q}_k\beta_k - w^-_k \\
& \boldsymbol{w} \ge 0, \boldsymbol{w}^- \ge 0, \chi \ge 0 \\
& \Delta_{\boldsymbol{\ell},k} \ge u_{\boldsymbol{\ell}} f_{\boldsymbol{\ell},k} - \eta_{\boldsymbol{\ell}} \\
& \eta_{\boldsymbol{\ell}} = u_{\boldsymbol{\ell}}\zeta \\
& \Delta_{\boldsymbol{\ell},k} \ge 0 \\
& \boldsymbol{u} \ge 0 \\
& \mathbf{1}^T\boldsymbol{u} = 1 \\
& 0 \le \zeta \le \bar{\zeta}
\end{aligned}$$

Add redundant constraints

$$\begin{aligned}
& \sum_{\boldsymbol{\ell} \in \mathcal{L}} \eta_{\boldsymbol{\ell}} = \zeta \\
& \eta_{\boldsymbol{\ell}} \ge u_{\boldsymbol{\ell}}\zeta_{\text{lb}} && \forall \boldsymbol{\ell} \in \mathcal{L} \\
& \eta_{\boldsymbol{\ell}} \le u_{\boldsymbol{\ell}}\zeta_{\text{ub}} && \forall \boldsymbol{\ell} \in \mathcal{L} \\
& \eta_{\boldsymbol{\ell}} \ge \zeta + \zeta_{\text{ub}}(u_{\boldsymbol{\ell}} - 1) && \forall \boldsymbol{\ell} \in \mathcal{L} \\
& \eta_{\boldsymbol{\ell}} \le \zeta + \zeta_{\text{lb}}(u_{\boldsymbol{\ell}} - 1) && \forall \boldsymbol{\ell} \in \mathcal{L}, \\
& \zeta_{\text{lb}} \le \zeta \le \zeta_{\text{ub}}
\end{aligned}$$

RRLT

Relaxation of interdictor's bilinear optimization problem is given by

$$
\begin{aligned}
\underset{\boldsymbol{u},\zeta,\boldsymbol{\Delta},t,\boldsymbol{\eta}}{\text{minimize}} \quad & t \\
\text{subject to} \quad & \zeta + \sum_{k' \in \mathcal{K}} w_{k'} + \sum_{k' \in \mathcal{K}} w^{-}_{k'} + \Gamma\chi \\
& + \sum_{k' \in \mathcal{K}} \hat{q}_{k'}\beta_{k'} + \frac{1}{1-\alpha}\sum_{\boldsymbol{\ell} \in \mathcal{L}} \Delta_{\boldsymbol{\ell},k} - \beta_k \leq t \qquad \forall k \in \mathcal{K} \\
& \chi \geq \bar{q}_k\beta_k - w_k \\
& \chi \geq -\bar{q}_k\beta_k - w^{-}_k \\
& \boldsymbol{w} \geq 0, \boldsymbol{w}^{-} \geq 0, \chi \geq 0 \\
& \Delta_{\boldsymbol{\ell},k} \geq u_{\boldsymbol{\ell}} f_{\boldsymbol{\ell},k} - \eta_{\boldsymbol{\ell}} \\
& \Delta_{\boldsymbol{\ell},k} \geq 0 \\
& \boldsymbol{u} \geq 0 \\
& \mathbf{1}^T\boldsymbol{u} = 1 \\
& 0 \leq \zeta \leq \bar{\zeta}
\end{aligned}
$$

$\eta_{\boldsymbol{\ell}} = u_{\boldsymbol{\ell}}\zeta,\ \forall \boldsymbol{\ell} \in \mathcal{L}$ replaced with

$$
\begin{aligned}
& \sum_{\boldsymbol{\ell} \in \mathcal{L}} \eta_{\boldsymbol{\ell}} = \zeta \\
& \eta_{\boldsymbol{\ell}} \geq u_{\boldsymbol{\ell}}\zeta_{\text{lb}} && \forall \boldsymbol{\ell} \in \mathcal{L} \\
& \eta_{\boldsymbol{\ell}} \leq u_{\boldsymbol{\ell}}\zeta_{\text{ub}} && \forall \boldsymbol{\ell} \in \mathcal{L} \\
& \eta_{\boldsymbol{\ell}} \geq \zeta + \zeta_{\text{ub}}(u_{\boldsymbol{\ell}} - 1) && \forall \boldsymbol{\ell} \in \mathcal{L} \\
& \eta_{\boldsymbol{\ell}} \leq \zeta + \zeta_{\text{lb}}(u_{\boldsymbol{\ell}} - 1) && \forall \boldsymbol{\ell} \in \mathcal{L}, \\
& \zeta_{\text{lb}} \leq \zeta \leq \zeta_{\text{ub}}
\end{aligned}
$$

COLUMN GENERATION

(a)

$$\begin{aligned} \underset{x,\{y_\ell\}_{\ell\in\mathcal{L}}}{\text{minimize}} \quad & h^T x \\ \text{s. t.} \quad & Ax + \sum_{\ell\in\mathcal{L}} B_\ell y_\ell \le s \\ & W_\ell y_\ell \le 0 \qquad \forall \ell \in \mathcal{L} \end{aligned}$$

where $y_\ell = [\Delta_\ell^T \; u_\ell \; \eta_\ell]^T, \; \forall \ell \in \mathcal{L}$

At optimality, $y_\ell \neq 0$ for a small set of index $\ell \in \mathcal{L}$. Given a set $\hat{\mathcal{L}} \subseteq \mathcal{L}$, by LP duality, we have that the solution of (b) is optimal with respect to (a) if and only if a solution of the dual of (b) can be completed with some $\sigma_\ell \in \mathbb{R}^{2|\mathcal{K}|+3}$ for all $\ell \in \mathcal{L}/\hat{\mathcal{L}}$ in a way that makes it feasible in the dual of problem (a), i.e., problem (c) where $\hat{\mathcal{L}}$ is replaced with $\mathcal{L}$.

(b)

$$\begin{aligned} \underset{x,\{y_\ell\}_{\ell\in\mathcal{L}}}{\text{minimize}} \quad & h^T x \\ \text{s. t.} \quad & Ax + \sum_{\ell\in\mathcal{L}} B_\ell y_\ell \le s \\ & W_\ell y_\ell \le 0 \qquad \forall \ell \in \hat{\mathcal{L}} \\ & y_\ell = 0 \qquad \forall \ell \in \mathcal{L}/\hat{\mathcal{L}} \end{aligned}$$

(c) – Dual of (b)

$$\begin{aligned} \underset{\psi,\{\sigma_\ell\}_{\ell\in\hat{\mathcal{L}}}}{\text{maximize}} \quad & -\psi^T s \\ \text{s. t.} \quad & h + A^T\psi = 0 \\ & B_\ell^T\psi + W_\ell^T\sigma_\ell = 0 \qquad \forall \ell \in \hat{\mathcal{L}} \\ & \psi \ge 0, \; \sigma_\ell \ge 0 \qquad \forall \ell \in \hat{\mathcal{L}} \end{aligned}$$

VERIFYING OPTIMALITY OF DUAL

- Solve problem (b) for some $\hat{\mathcal{L}} \subseteq \mathcal{L}$ to obtain optimal dual variables $(\hat{\psi}, \{\hat{\boldsymbol{\sigma}}_{\boldsymbol{\ell}}\}_{\ell \in \hat{\mathcal{L}}})$ and verify if they satisfy

$$\inf_{\boldsymbol{\ell} \in \mathcal{L}} \sup_{\boldsymbol{\sigma}_{\boldsymbol{\ell}} \geq 0} \inf_{\boldsymbol{y}_{\boldsymbol{\ell}}} \psi^{*T} B_{\boldsymbol{\ell}} \boldsymbol{y}_{\boldsymbol{\ell}} + \boldsymbol{\sigma}_{\boldsymbol{\ell}}^{T} W_{\boldsymbol{\ell}} \boldsymbol{y}_{\boldsymbol{\ell}} \geq 0. \tag{3}$$

- When above condition is not satisfied, a violating $\boldsymbol{\ell} \in \mathcal{L}$, which is necessarily not in $\hat{\mathcal{L}}$, can be identified and added to $\hat{\mathcal{L}}$ to improve the solution obtained by problem (b).
- (3) can be verified by solving a mixed integer linear program.

CORDINATE DESCENT FOR $g_{\text{UB}}(\mathcal{I})$

- Identify optimal support $\mathcal{L}^*_{\text{lb}}$ and distribution $\boldsymbol{u}^*_{\text{lb}}$ of lower bounding problem.
- Coordinate descent on the following problem where $\mathcal{L}$ is replaced with $\mathcal{L}^*_{\text{lb}}$ iterating between a step where $\boldsymbol{u}$ stays fixed at the best solution found so far, initially at $\boldsymbol{u}^*_{\text{lb}}$, and a step where it is rather ζ that stays fixed

$$
\begin{aligned}
\underset{\boldsymbol{u}\geq 0,\zeta\in\mathcal{I},\boldsymbol{\Delta}\geq 0,t,\boldsymbol{\eta}}{\text{minimize}} \quad & t \\
\text{subject to} \quad & \zeta + \sum_{k'\in\mathcal{K}} w_{k'} + \sum_{k'\in\mathcal{K}} w^-_{k'} + \Gamma\chi \\
& \quad + \sum_{k'\in\mathcal{K}} \hat{q}_{k'}\beta_{k'} + \frac{1}{1-\alpha}\sum_{\boldsymbol{\ell}\in\mathcal{L}} \Delta_{\boldsymbol{\ell},k} - \beta_k \leq t && \forall k\in\mathcal{K} \\
& \chi \geq \bar{q}_k\beta_k - w_k && \forall k\in\mathcal{K} \\
& \chi \geq -\bar{q}_k\beta_k - w^-_k && \forall k\in\mathcal{K} \\
& \boldsymbol{w}\geq 0, \boldsymbol{w}^-\geq 0, \chi\geq 0 \\
& \Delta_{\boldsymbol{\ell},k} \geq u_{\boldsymbol{\ell}} f_{\boldsymbol{\ell},k} - \eta_{\boldsymbol{\ell}} && \forall \boldsymbol{\ell}\in\mathcal{L},\ k\in\mathcal{K} \\
& \eta_{\boldsymbol{\ell}} = u_{\boldsymbol{\ell}}\zeta && \forall \boldsymbol{\ell}\in\mathcal{L} \\
& \mathbf{1}^T\boldsymbol{u} = 1
\end{aligned}
$$

Numerical Experiments

For each DRNI problem instance, capacity vector scenarios are drawn from a factor model, $\boldsymbol{c} := F\boldsymbol{\xi}$, with each ξ_i independently distributed according to an exponential distribution with mean μ_i, for some fixed $F \in \mathbb{R}^{|E|\times 2}$ and $\boldsymbol{\mu} \in \mathbb{R}^2$ that were randomly generated for the given instance.

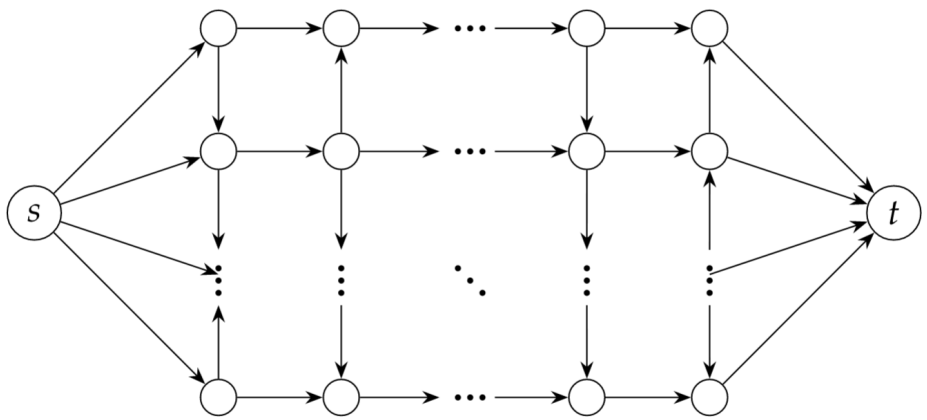

Convergence of spatial B&B

- We randomly generate 10 instances of sizes 10×10, 20×20, 30×30, and 40×40.
- For each instance, we consider $|\mathcal{K}| = 20$ randomly generated scenarios from the constructed factor model.
- We solve the instances for a convergence tolerance, ϵ, either equal to 0.01% or 0.0001%, terminating the algorithm if the higher precision is not achieved after 1 hr. $\Gamma = 4$, $B = 4$, $\hat{\boldsymbol{q}} = (1/20)\mathbf{1}$, $\bar{\boldsymbol{q}} = \mathbf{1}$, $\alpha = 0.05$

Table: * avg. cpu time (CPLEX) for instances which converged with .0001% precision in 1 hr

Problem size ($m \times n$)	avg. cpu time (s)*		gap $> 0.0001\%$ after 1 hr	
	$\epsilon = 0.01\%$	$\epsilon = 0.0001\%$	# instances	avg. optimality gap
10×10, $\lvert E\rvert = 200$	3	4.65	0	–
20×20, $\lvert E\rvert = 800$	37.53	94.11	0	–
30×30, $\lvert E\rvert = 1800$	302	340.34	0	–
40×40, $\lvert E\rvert = 3200$	291.11	433.96	1	0.0005%

Comparison of spatial B&B with a heuristic

- Select N values of ζ in the interval $[\zeta_{lb}, \zeta_{ub}]$, and determine a feasible solution for the interdictor.
- Compare spatial B&B with the heuristic for 10 randomly generated instances of sizes (10×10)

# partitions	avg. cpu time (s)	avg optimality gap
10	5.39	1.03%
50	27.42	0.14%
100,	54.82	0.05%
200	110.02	0.04%
500	275.93	0.02%
spatial B&B	**2.49**	**0** %

In-sample performance

- $|\mathcal{K}| = 20$ scenarios from the underlying distribution.
- The added value of the randomized strategy

$$\text{VRS} = \frac{\max_{q \in \hat{\mathcal{Q}}_{20}} \text{CVaR}^{\alpha}_{k \sim q}[f_{\hat{\ell}^*_{20},k}] - \max_{q \in \hat{\mathcal{Q}}_{20}} \text{CVaR}^{\alpha}_{\ell \sim \hat{u}^*_{20}, k \sim q}[f_{\ell,k}]}{\max_{q \in \hat{\mathcal{Q}}_{20}} \text{CVaR}^{\alpha}_{\ell \sim \hat{u}^*_{20}, k \sim q}[f_{\ell,k}]} \times 100\%.$$

where $\hat{\mathcal{Q}}_{20}$ is centered at the empirical distribution over the sample set.

In-sample performances

Problem size $(5 \times 5, |E| = 50)$, $|\mathcal{K}| = 20$ scenarios from the underlying distribution.
Generate 100 set of samples, $B = 3$, $\alpha = 0.05$, $\hat{\boldsymbol{q}} = (1/20)\mathbf{1}$, and $\bar{\boldsymbol{q}} = \mathbf{1}$.

Table: In-sample VRS, avg. VRS is reported conditional on VRS $\geq 1\%$

Γ	VRS $= 0$	$0 <$ VRS $< 1\%$	VRS $\geq 1\%$	
	# instances	# instances	# instances	avg. VRS
0	100	0	0	0
0.1	96	3	1	3.07%
0.5	94	2	4	7.95%
0.75	92	3	5	9.44%
1	89	4	7	9.82%
5	82	6	12	11.46%
10	82	6	12	11.46%
20	82	6	12	11.46%

Conclusions

- We introduced a distributionally robust risk averse network interdiction problem
- We presented a spatial branch and bound algorithm to solve our problem
- Our numerical experiments showed that
  1. our proposed spatial branch and bound algorithm can efficiently solve distributionally robust interdiction problems of reasonable sizes
  2. randomization can be quite effective in reducing the risk exposure obtained from the optimal deterministic interdiction strategy when comparing in-sample worst-case CVaR performance.

In the future, it would be interesting to apply our results to case studies involving law-enforcement agents who aim to reduce the illegal flow of drugs, weapons and money.

Bibliography

Ben-Tal, A. and Nemirovski, A. (2000). Robust solutions of linear programming problems contaminated with uncertain data. *Mathematical Programming, Series A*, 88(3):411–424.

Chandraker, M. and Kriegman, D. (2008). Globally optimal bilinear programming for computer vision applications. In *2008 IEEE Conference on Computer Vision and Pattern Recognition*, pages 1–8. IEEE Computer Society, Anchorage, AK.

Delage, E., Kuhn, D., and Wiesemann, W. (2019). "dice"-sion–making under uncertainty: When can a random decision reduce risk? *Management Science*, 65(7):3282–3301.

Liberti, L. and Pantelides, C. C. (2006). An exact reformulation algorithm for large nonconvex nlps involving bilinear terms. *Journal of Global Optimization*, 36(2):161–189.

Smith, J. E. and Winkler, R. L. (2006). The optimizer's curse: Skepticism and postdecision surprise in decision analysis. *Management Science*, 52(3):311–322.

Wood, R. K. (1993). Deterministic network interdiction. *Mathematical and Computer Modelling*, 17(2):1–18.

Questions & Comments ...

Link for our paper

... Thank you!